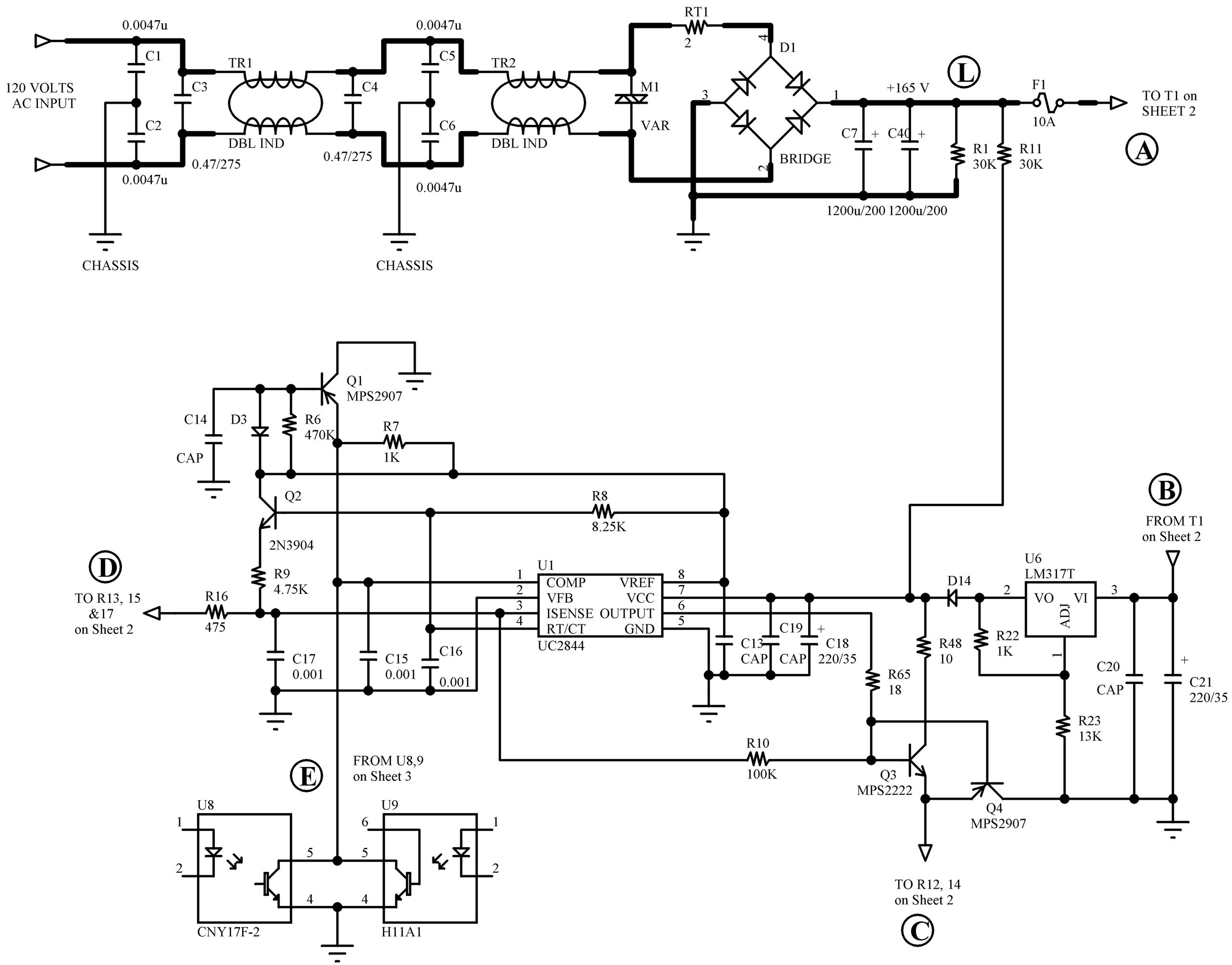

SHEET 1

MAGNETEK 7345A Board # 33038215-000B	RV-CONV
	16 FEB 18

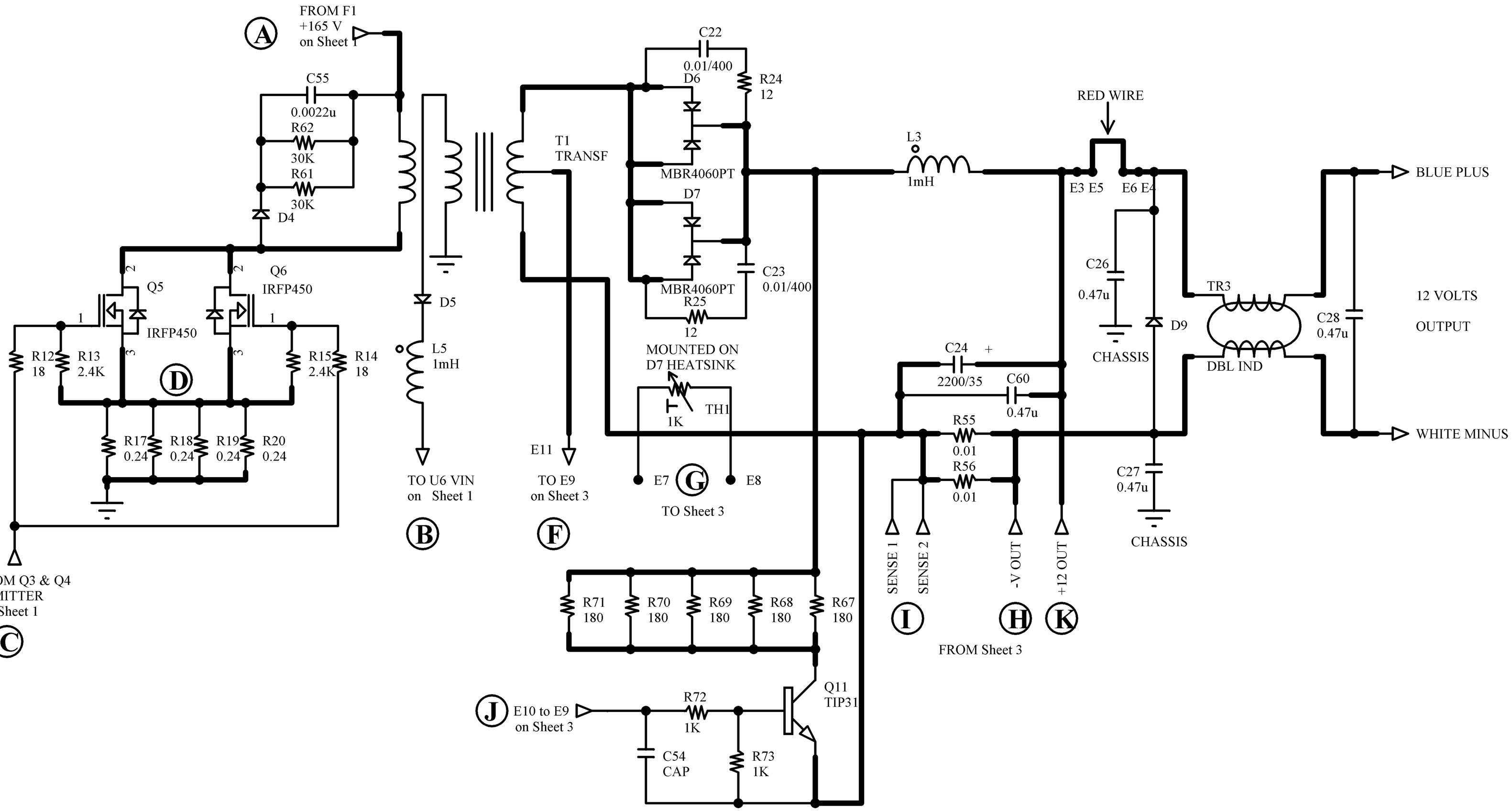

SHEET 2

MAGNETEK 7345A	RV-CONV
	16 FEB 18

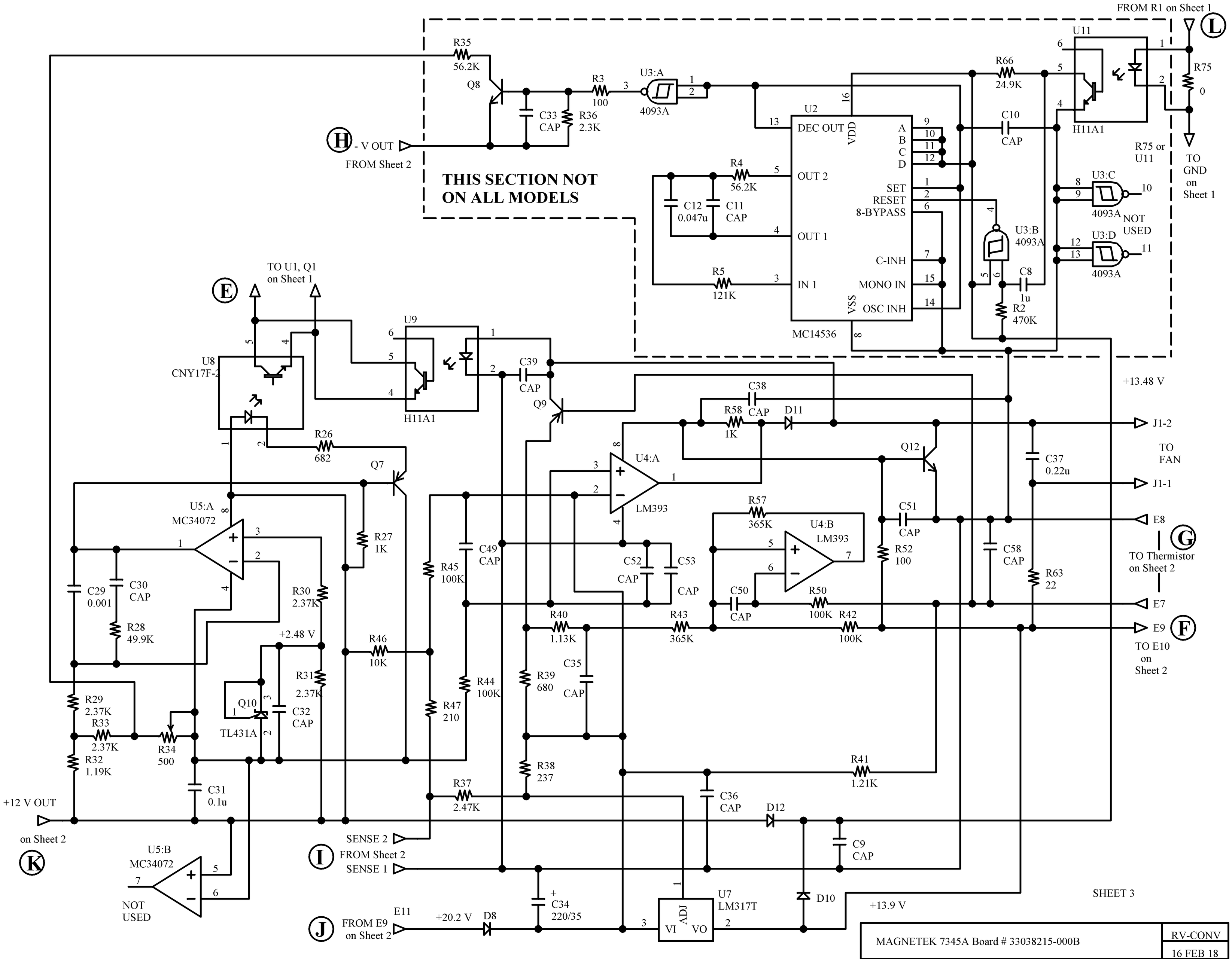
FROM R1 on Sheet 1
L
R35
56.2K
Q8
R3
100
U3:A
4093A
C33
CAP
R36
2.3K
H
- V OUT
FROM Sheet 2
THIS SECTION NOT
ON ALL MODELS
U2
DEC OUT
OUT 2
OUT 1
IN 1
VDD
VSS
A
B
C
D
SET
RESET
8-BYPASS
C-INH
MONO IN
OSC INH
MC14536
R4
56.2K
C12
0.047u
C11
CAP
R5
121K
R66
24.9K
C10
CAP
U11
H11A1
R75
0
R75 or
U11
TO
GND
on
Sheet 1
U3:C
4093A
NOT
USED
U3:D
4093A
U3:B
4093A
C8
1u
R2
470K
E
TO U1, Q1
on Sheet 1
U8
CNY17F-2
U9
H11A1
C39
CAP
Q9
R26
682
Q7
U5:A
MC34072
R27
1K
C29
0.001
C30
CAP
R28
49.9K
R30
2.37K
+2.48 V
R46
10K
R31
2.37K
Q10
TL431A
C32
CAP
R29
2.37K
R33
2.37K
R34
500
R32
1.19K
C31
0.1u
+12 V OUT
on Sheet 2
K
U5:B
MC34072
NOT
USED
R45
100K
R44
100K
R47
210
R37
2.47K
SENSE 2
I
FROM Sheet 2
SENSE 1
C49
CAP
U4:A
LM393
C38
CAP
R58
1K
D11
C52
CAP
C53
CAP
R40
1.13K
R43
365K
C35
CAP
R39
680
R38
237
C36
CAP
D12
C9
CAP
+13.48 V
J1-2
TO
FAN
J1-1
Q12
C37
0.22u
R57
365K
U4:B
LM393
C51
CAP
R52
100
C58
CAP
R63
22
E8
G
TO Thermistor
on Sheet 2
E7
C50
CAP
R50
100K
R42
100K
R41
1.21K
E9
F
TO E10
on
Sheet 2
J
E11
FROM E9
on Sheet 2
+20.2 V
D8
C34
220/35
U7
LM317T
ADJ
VI
VO
D10
+13.9 V
SHEET 3
MAGNETEK 7345A Board # 33038215-000B
RV-CONV
16 FEB 18

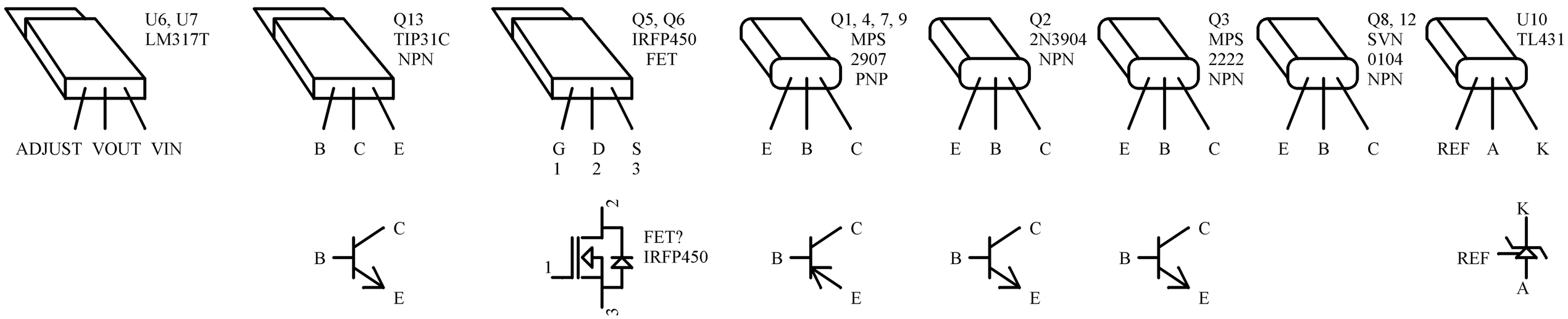

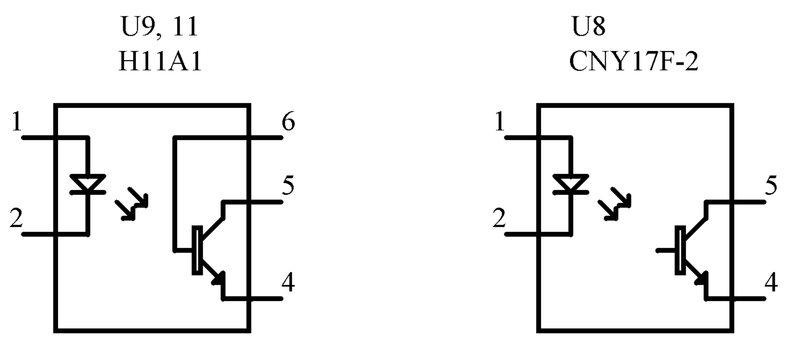

SHEET 4

MAGNETEK 7345A	RV-CONV
	16 FEB 18