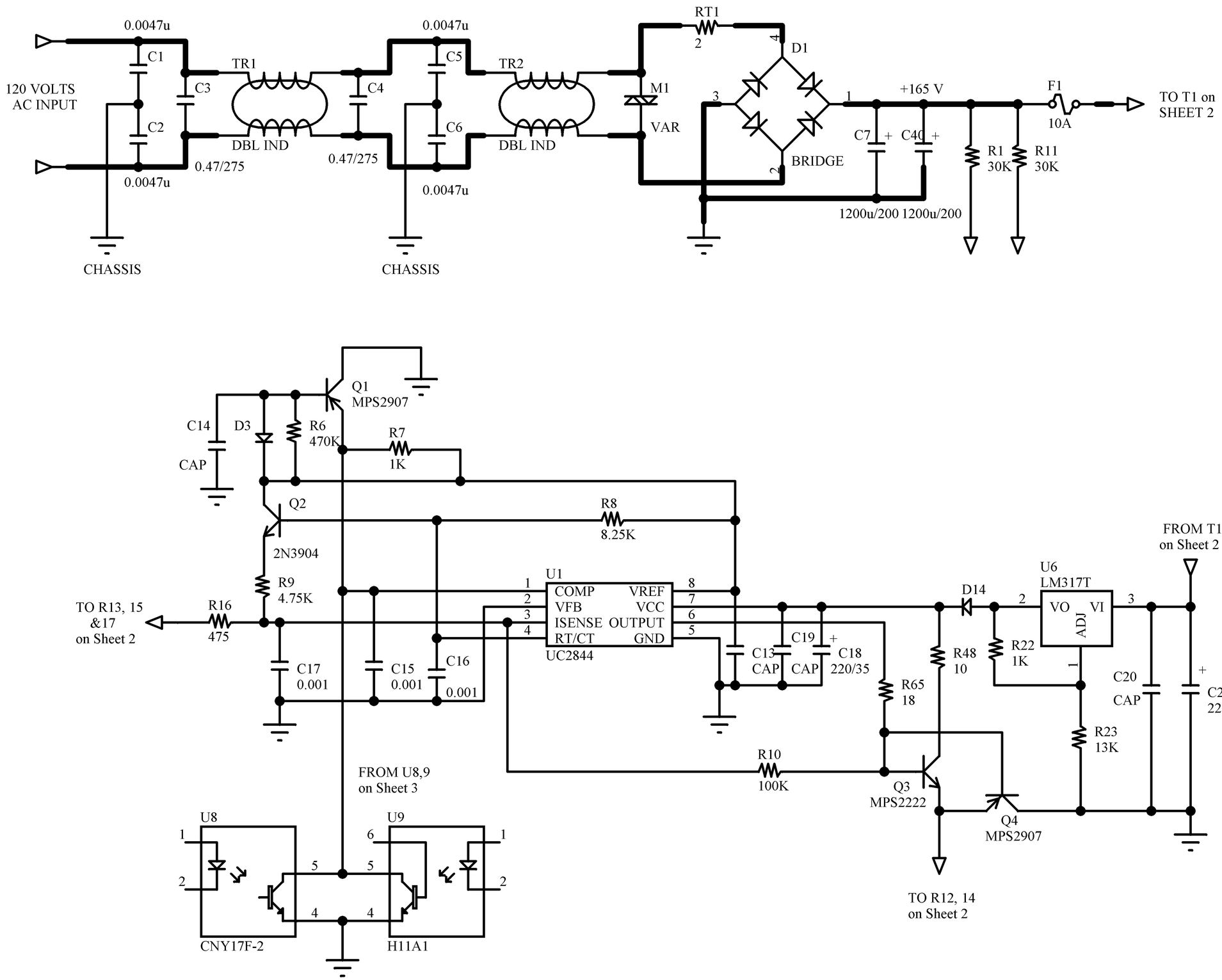

SHEET 1

MAGNETEK 7345A Board # 33038215-000B	RV-CONV
	16 FEB 18

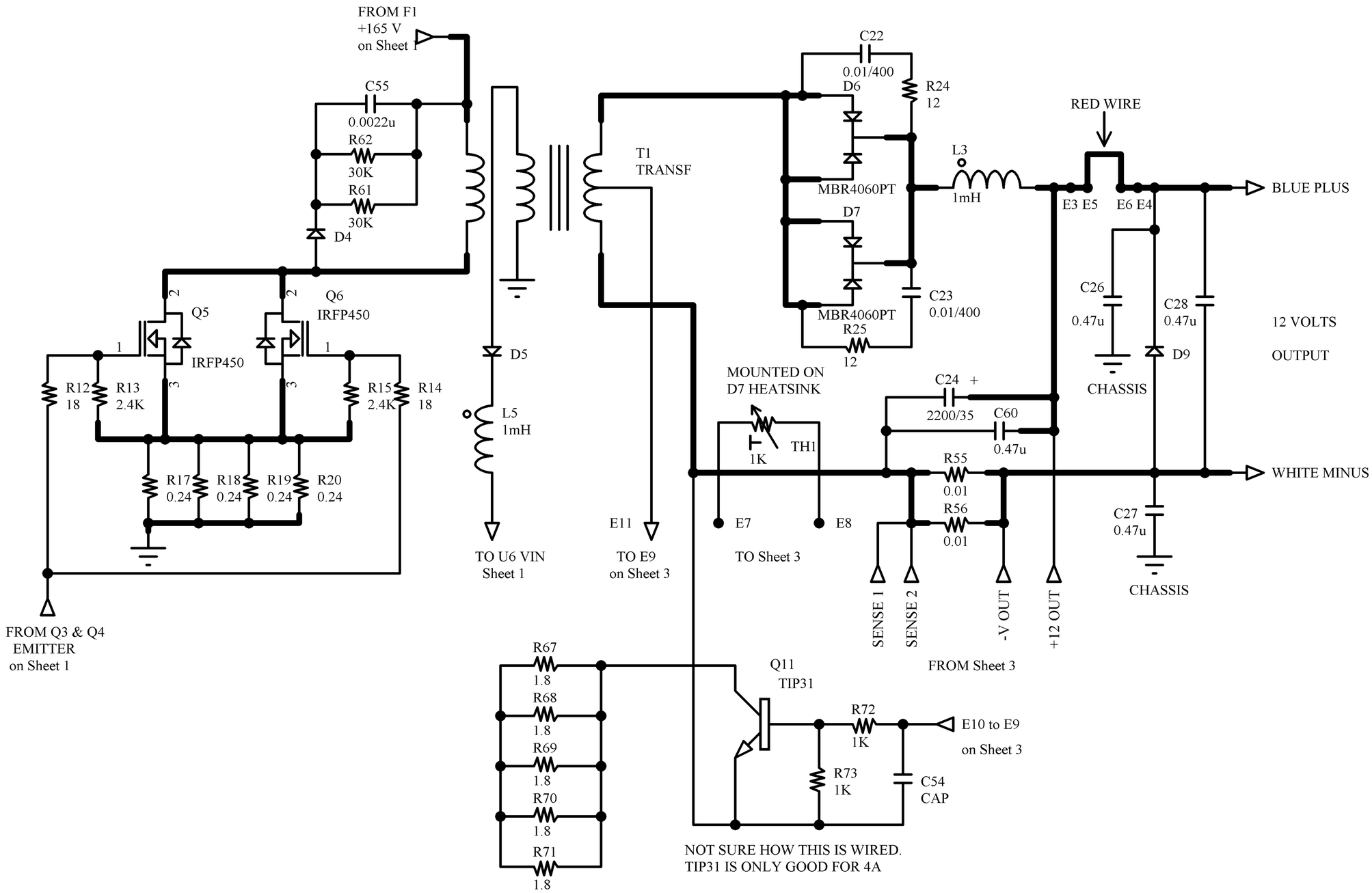

SHEET 2

MAGNETEK 7345A	RV-CONV
	16 FEB 18

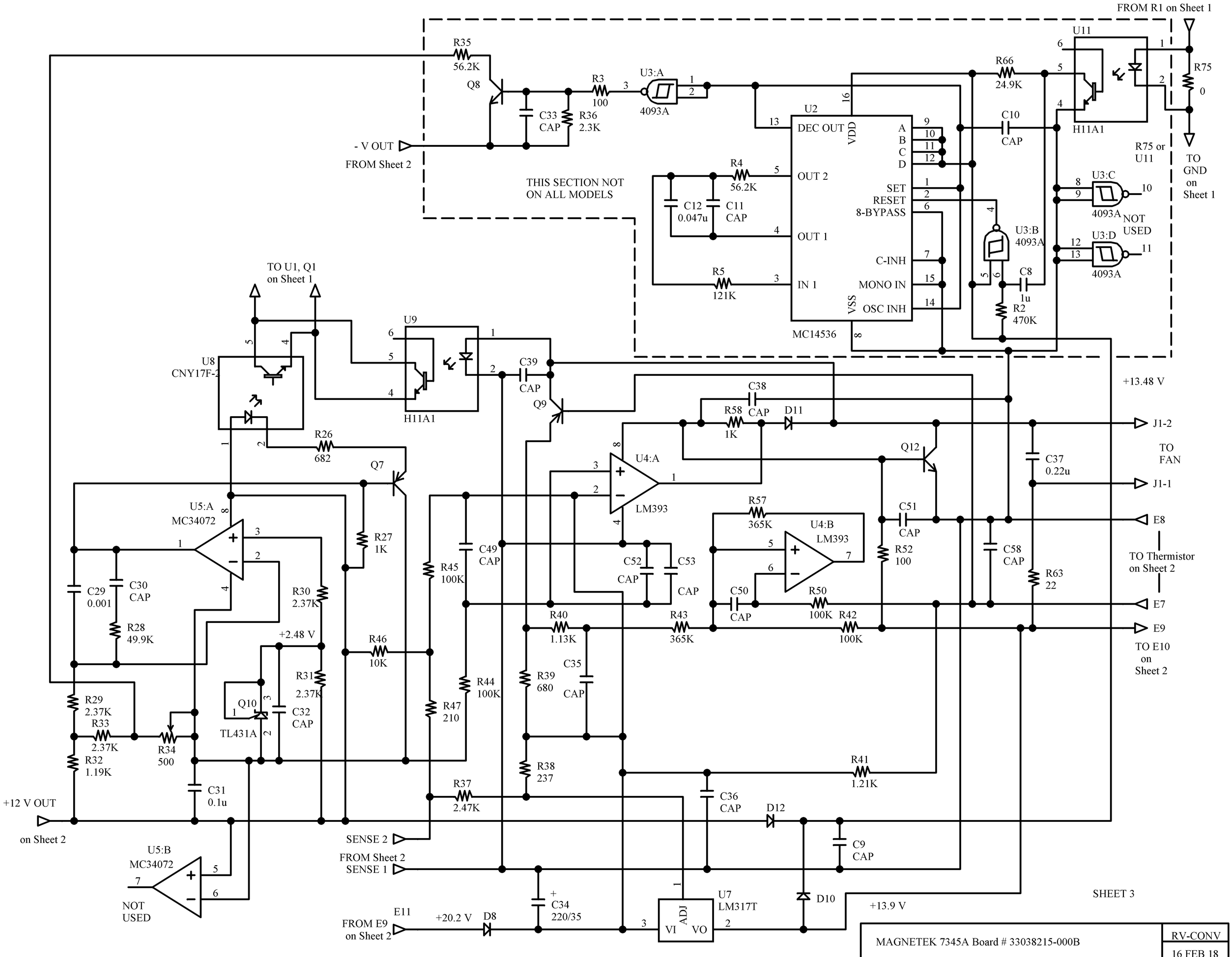
FROM R1 on Sheet 1
R35
56.2K
Q8
R3
100
U3:A
4093A
C33
CAP
R36
2.3K
- V OUT
FROM Sheet 2
THIS SECTION NOT
ON ALL MODELS
U2
DEC OUT
OUT 2
OUT 1
IN 1
VDD
VSS
A
B
C
D
SET
RESET
8-BYPASS
C-INH
MONO IN
OSC INH
MC14536
R4
56.2K
C12
0.047u
C11
CAP
R5
121K
R66
24.9K
C10
CAP
U11
H11A1
R75
0
R75 or
U11
TO
GND
on
Sheet 1
U3:C
4093A
NOT
USED
U3:D
4093A
U3:B
4093A
C8
1u
R2
470K
TO U1, Q1
on Sheet 1
U8
CNY17F-2
U9
H11A1
C39
CAP
Q9
R26
682
Q7
C38
CAP
R58
1K
D11
+13.48 V
J1-2
TO
FAN
J1-1
U4:A
LM393
Q12
C37
0.22u
U5:A
MC34072
R27
1K
R57
365K
U4:B
LM393
C51
CAP
E8
TO Thermistor
on Sheet 2
E7
E9
TO E10
on
Sheet 2
C29
0.001
C30
CAP
R28
49.9K
R30
2.37K
+2.48 V
R46
10K
R45
100K
C49
CAP
C52
CAP
C53
CAP
R52
100
C58
CAP
R63
22
C50
CAP
R50
100K
R42
100K
R40
1.13K
R43
365K
R31
2.37K
Q10
TL431A
C32
CAP
R44
100K
R47
210
R39
680
C35
CAP
R29
2.37K
R33
2.37K
R34
500
R32
1.19K
R38
237
R41
1.21K
C31
0.1u
R37
2.47K
C36
CAP
D12
+12 V OUT
on Sheet 2
SENSE 2
FROM Sheet 2
SENSE 1
C9
CAP
U5:B
MC34072
NOT
USED
E11
FROM E9
on Sheet 2
+20.2 V
D8
C34
220/35
U7
LM317T
ADJ
VI
VO
D10
+13.9 V
SHEET 3
MAGNETEK 7345A Board # 33038215-000B
RV-CONV
16 FEB 18

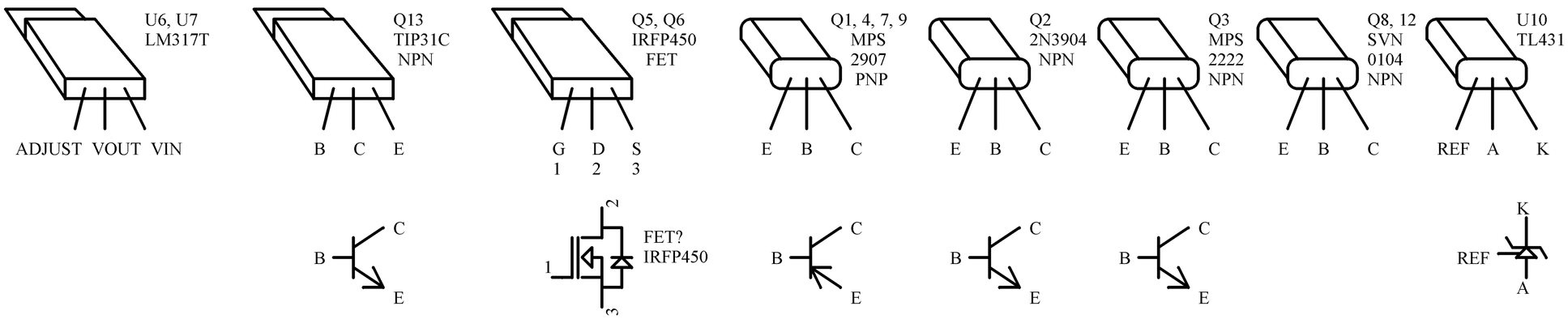

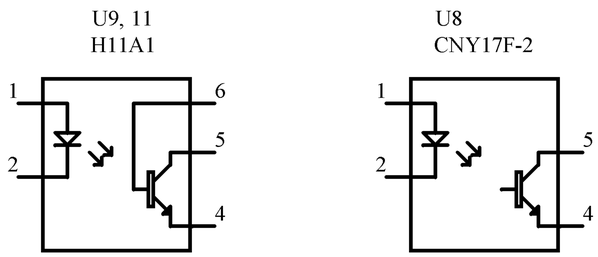

SHEET 4

MAGNETEK 7345A	RV-CONV
	16 FEB 18